OCV Model 68 DE\EL\PORV-DN-MR

Aquestia
Directing the Flow

Pre-Action Valves

General representation

Fire Protection

Double-Interlock Pre-Action, Manual Reset, Electro-Pneumatic Release System

Description

Electrically and pneumatically, pilot controlled, double-interlock, pre-action valve, actuated by the pipeline pressure. The valve is closed in its normal, set position and opens when the pressure drops in a gas pressurized supervisory pilot line, sensed by the relay valve, and the solenoid valve is energized. The valve must be manually reset following automatic actuation. An emergency manual release valve is fitted as standard.

Certification & Compliance

UL Listed under VLFT category

ABS Type Approval

Lloyd's Register Approval

ANSI FCI 70-2 Class VI seat leakage class

Fire tested to EN ISO 6182-5:2006 (2"-6" only)

Features & Benefits

- High pressure (PN25/375psi), high flow systems
- Automatic or manual emergency actuation
- Industrial & commercial fire suppression
- Hazardous, flammable & explosion classified area fire suppression
- Superior design featuring exceptionally low pressure losses at high flow rates
- Low lifelong maintenance costs due to straightforward design
- Applicable for water, seawater & foam
- Out of box fully assembled & tested valves
- Factory trimmed for vertical & horizontal installations without modification
- Extensive valve & trim materials selection and corrosion protection coating

Typical Applications

Machine Rooms

Cold Storage Protected Areas

High Rise Buildings & Offices

Power Plants

Archives, Museums, Libraries, & Water Sensitive Depots

Operation

The basic control valve [1] used in this pre-action system is a direct-sealing elastomeric diaphragm, hydraulically operated control valve engineered specifically for fire protection systems.

In the standby position, the pre-action valve is held closed by the upstream water pressure, trapped in the valve's control chamber. The water pressure enters the control chamber through the priming line ball valve [2], a Y-type strainer [3], a check valve [4] and a DMR (Manual Reset Latching Device) [5].

The pre-action valve opens automatically when both conditions below occur simultaneously:

1. A fire alarm control panel (F&G panel) energizes the 2/2-way N.C. solenoid [10] (or de-energizes the coil of a continuously energized ED 100% normally open solenoid for SIL 3-4 rated systems).
2. The pressure in the dry (pneumatically-pressurized) automatic sprinkler line drops, following bursting of one (or more) of the automatic sprinklers sensed by the relay valve [9].

When both conditions occur, water is drained from the pre-action valve's control chamber through the 2/2-way N.C. solenoid. The valve opens instantly allowing water to flow into the pipeline, through any open sprinklers and over the protected area. Pressure switches on the valve's downstream port [11] and the check valve's downstream port [12] provide electrical indication to the fire alarm control panel of rising water pressure (the valve has opened) and drop in air (or gas) pressure (one or more sprinklers have burst).

Manual emergency actuation is enabled by opening the emergency manual activation valve [6]. The pre-action valve opens instantly and allows water to flow into the pipeline and through the open sprinklers over the protected area.

When the valve trips open, the DMR isolates the control chamber from the upstream pressure source. Reconnecting the upstream pressure to enable the pre-action valve to close can only be achieved by pressing the DMR's knob.

Standby Position

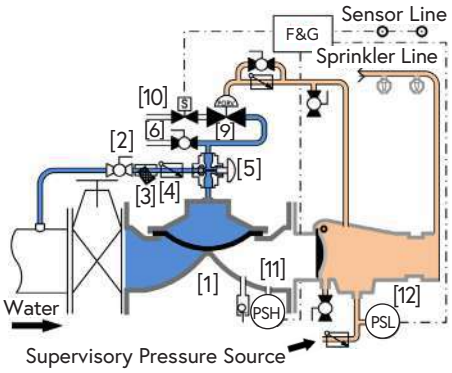

Sprinkler Burst
(Valve Remains Closed)

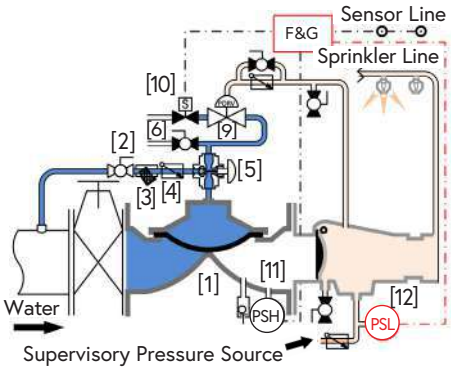

Sensor Energized
(Valve Remains Closed)

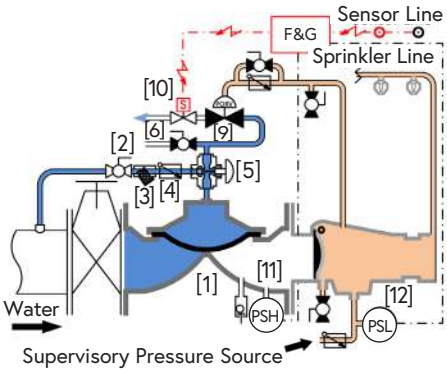

Solenoid Energized & Sprinkler Burst

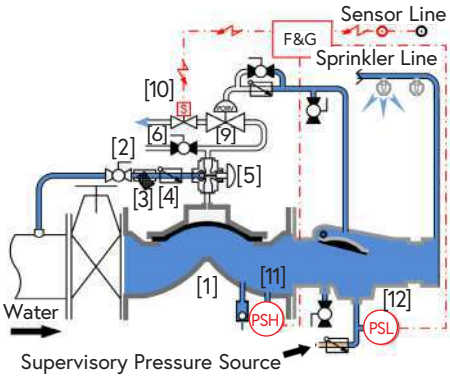

Manually Actuated

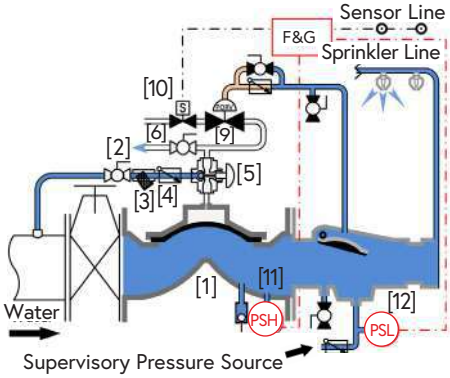

Reset to Close

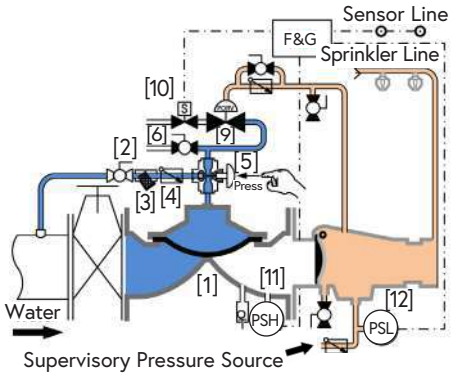

Resetting, maintenance, and periodic testing instructions must be followed as described in detail in the applicable OCV IOM (Installation, Operation & Maintenance) Manual.

Components & Typical Materials

The OCV 68 DE\EL\PORV-DN-MR consists of the following components, arranged as shown on the schematic diagram below.

ID	Part	Standard Material	Industrial Applications
1	Valve Body	See OCV S100 Engineering Data (1)	
2	Ball Valve	Bronze, Stainless Steel Ball	Stainless Steel 316
3	Y-Type Strainer	Bronze, Stainless Steel Screen	Stainless Steel 316
4	Check Valve	Bronze	Stainless Steel 316
5	DMR (Manual Reset Latching Device)	Brass	Stainless Steel 316
6	Manual Emergency Valve	Bronze	Stainless Steel 316
7	Drip Valve	Brass	Stainless Steel 316
8	Pressure Gauge	Stainless Steel	Stainless Steel 316
9	66-2UL Relay	Brass	Stainless Steel 316
10	2/2 Way N.C. Solenoid (2)	Brass	Stainless Steel 316
11	PSH (Pressure Switch High)	Specified Upon Request	Specified Upon Request
12	PSL (Pressure Switch Low)	Specified Upon Request	Specified Upon Request
13	Riser Check Valve	Ductile Iron	Ductile Iron

(1) Refer to materials selection guidelines, Engineering Data - Materials: Ductile Iron A-536 65-45-12; Cast Steel A-216 WCB; Cast Steel A-352 LCB; Austenitic Stainless Steel A-351/CF8M; Super Duplex 2507; Nickel-Aluminum-Bronze B-148 UNS C95800

(2) Consult factory

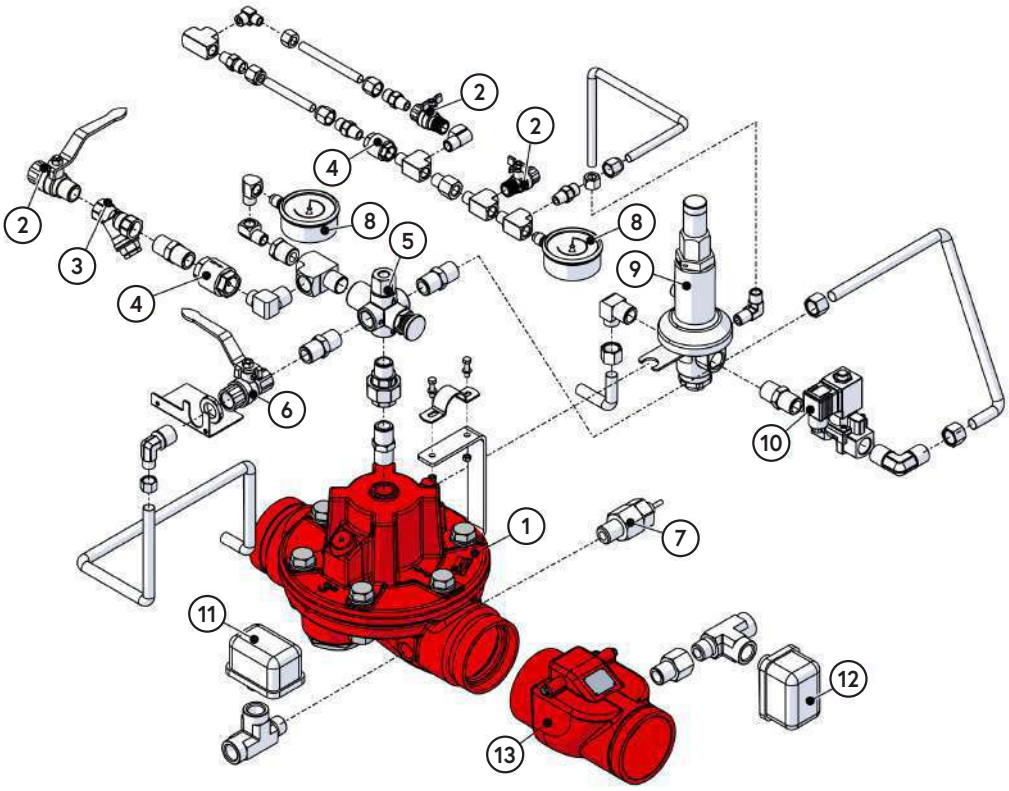

General Arrangement & Dimensions

Standard Sizes							
DIM	2"	2 1/2"	3"	4"	6"	8"	10"
A	9 5/8	9 3/16	12 3/16	14	17 3/16	20 7/8	25
A_G(1)	9 5/8	10	13 3/16	15	17 5/16	21 7/8	--
B	6 5/8	7 3/8	7 7/8	9 3/8	12 1/8	14 3/16	16 7/8
C	5 5/8	5 5/8	5 5/8	5 5/8	6 3/16	7 7/8	9 11/16
D	7 11/16	7 11/16	9	9 5/8	10 11/16	12 3/16	14 3/16
E	10	10	12 5/8	12 1/2	15 11/16	16 1/2	17 3/8
F	10 5/16	10 5/16	10 5/16	10 5/16	10 5/16	10 3/8	12 1/2
G	9 3/16	9 3/16	9 3/16	9 3/16	9 3/16	10 3/8	12 1/2

Approximate Dimensions. (1) Grooved model length.

Metric Sizes							
DIM	DN50	DN65	DN80	DN100	DN150	DN200	DN250
A	243	233	310	356	436	530	635
A_G(1)	243	253	336	380	440	556	--
B	168	185	200	238	306	360	430
C	143	143	143	143	160	200	249
D	196	196	229	243	272	312	361
E	255	255	321	317	400	420	443
F	262	262	262	262	262	265	318
G	234	234	234	234	234	265	318

Approximate Dimensions. (1) Grooved model length.

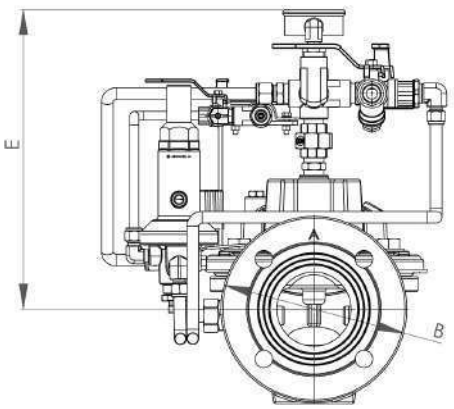

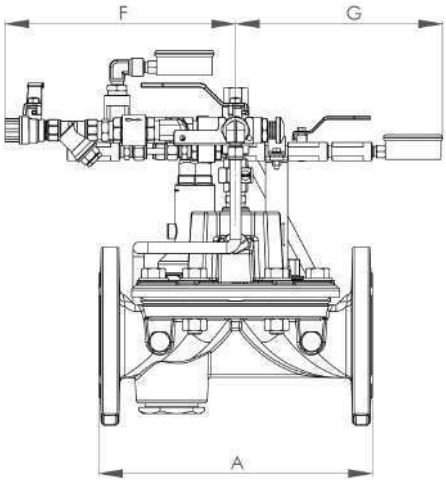

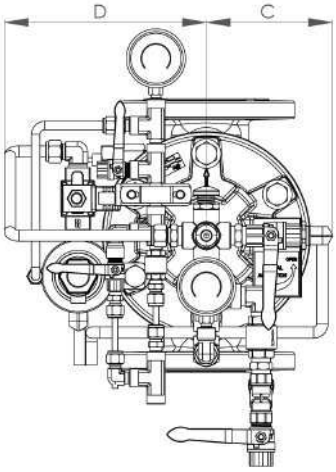

Typical Installation

The typical installation of the OCV 68 DE\EL\PORV-DN-MR is as shown:

1 Double-Interlock Pre-Action Manual Reset, Electro-Pneumatic Release System
2 PPCS (Pneumatic Pressure Control System)
3 Automatic Sprinkler Line
4 F&G Panel
5 DMR (Manual Reset Latching Device)
6 PSL (Pressure Switch Low Air)
7 Heat/Smoke/Other Detectors

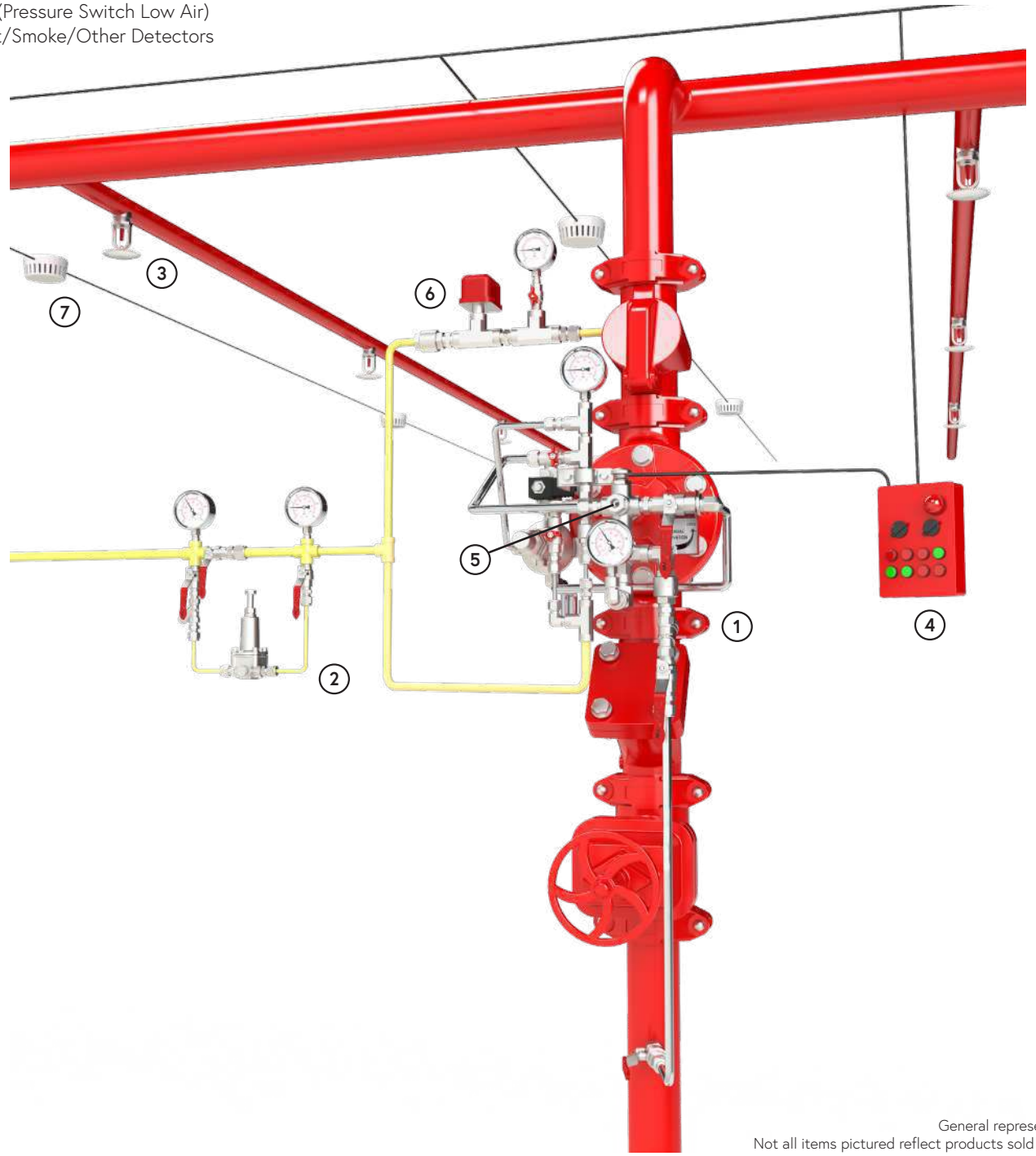

General representation.
Not all items pictured reflect products sold by OCV.

OCV Model 68 DE\EL\PORV-DN-MR

Pre-Action Valves

Aquestia
Directing the Flow

Technical Data

Temperature (Elastomers)	
Media	up to 80°C = 176°F
Elastomers	suitable for extreme climates (available upon request)
Sizes	
UL Listed Model 68	2" - 10"
Straight Flow	2" - 24"
Pressure Rating (ANSI at 100°F)	
250psi for Class 150#	
375psi for Class 300#	
End Connections	
Flanged	ISO-PN16 & ISO-PN25
	ANSI B16.42 & B16.5 Class 150# & 300#
	Additional options available upon request
Grooved	Sizes: 2"-8"

Body & Cover Material	
Ductile Iron	Stainless Steel
Cast Steel	NAB
Trim Material	
Bronze/Brass - Copper	
Stainless Steel	
Monel	
Optional Components	
Position Indicator	
Alarm Test Trim	
Upstream Drain Valve	
Pressure Switch	
Limit/Proximity Switch	
Spring	
Items to Specify	
Electrical features other than standard (24VDC, IP65/NEMA4)	
If explosion proof accessories are required such as solenoids, pressure switches, etc., please define classification	
Control trim material other than standard	
Required standards, certifications and approvals	

Engineering Specifications

The pre-action valve shall be hydraulically operated, direct elastomeric diaphragm-seal, single chamber weir type. The valve shall consist of three major components: the body, the cover and the diaphragm assembly. The diaphragm assembly shall be the only moving part. The diaphragm forms a sealed control chamber in the upper portion of the valve, separating operating pressure from line pressure. Packing glands, stuffing boxes and dynamic o-ring seals are not permitted and there shall not be shafts, discs, bearings or pistons operating the valve. No hourglass shaped disc retainers shall be permitted, and no V-type, U-type or other slotted type disc guides shall be used. The valve shall contain a nylon reinforced rubber diaphragm, elastic & resilient through its entire surface without vulcanized radial seals and/or reinforcements. The diaphragm assembly shall not be guided by any shafts or bearings and shall not be in close contact with other valve parts except for its sealing surface. The pre-action valve shall be fully trimmed, hydrostatically and operationally tested at the factory. Maintenance, disassembly and reassembly of all the valve's components shall be made possible on-site and in-line, without the need to remove the valve from the line. Main valve body and bonnet standard material shall be ductile iron or cast steel. Main valve body and bonnet surfaces shall include a fire red epoxy coating. Other materials and coatings available upon request. The pre-action valve shall be an OCV 68 DE\EL\PORV-DN-MR, UL Listed under VLFT category, as manufactured by OCV, an Aquestia Ltd. brand, Tulsa, OK, USA.

Aquestia Ltd. reserves the right to make product changes without prior notice. To ensure receiving updated information on parts specifications, please contact us at info@aquestia.com. Aquestia Ltd. shall not be held liable for any errors. All rights reserved.